SENTINEL®

Vortex150

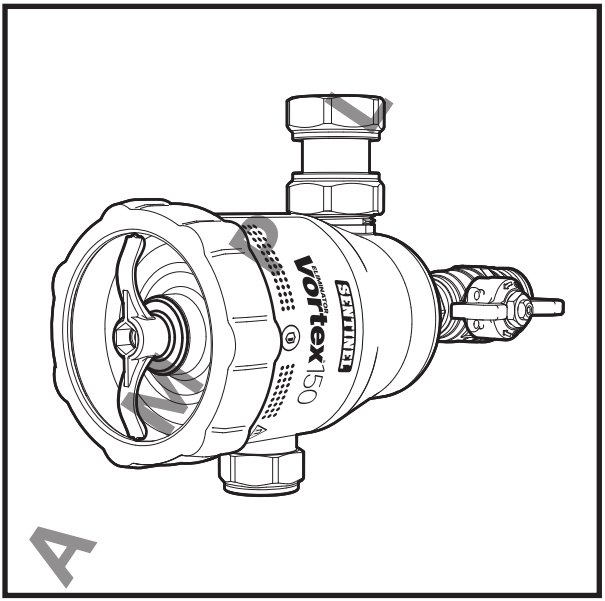

5/2021

SAMPLE

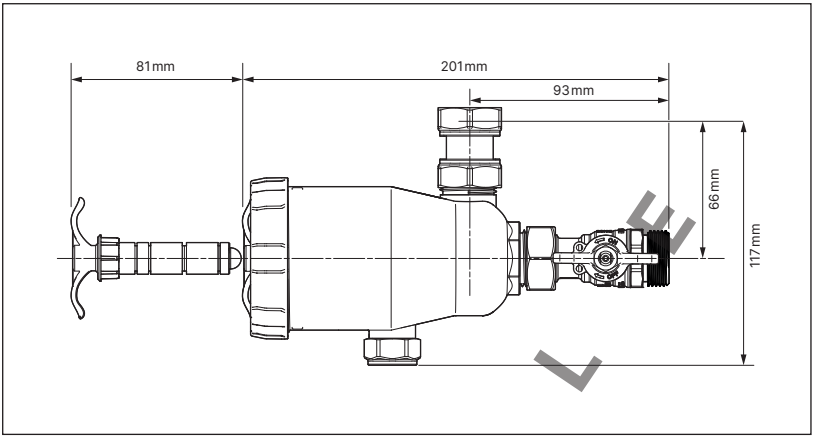

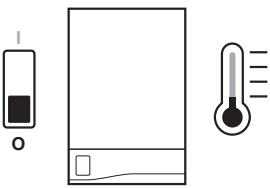

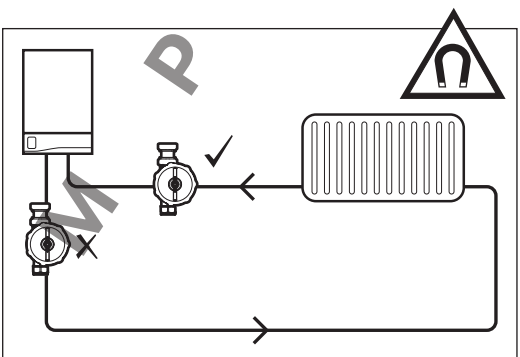

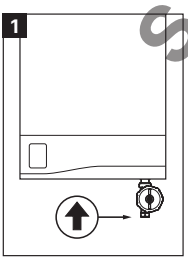

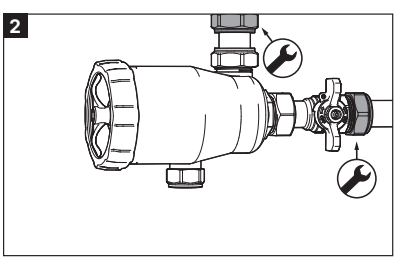

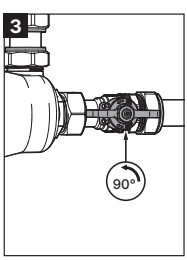

SAMPLE

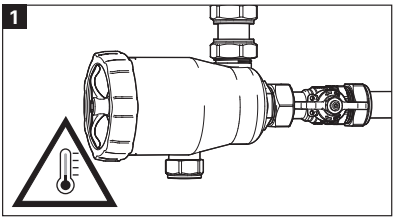

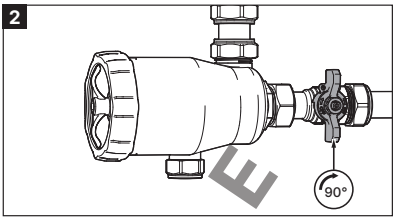

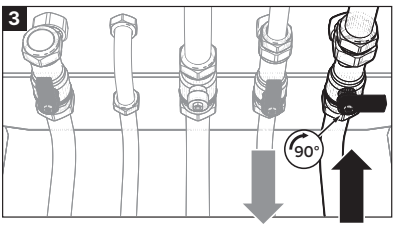

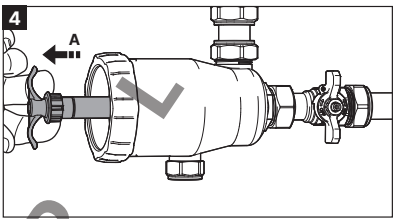

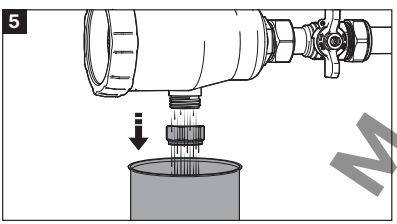

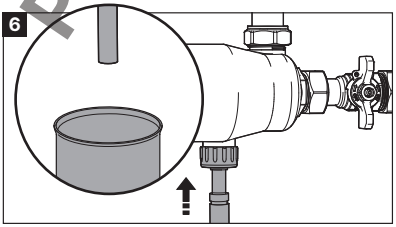

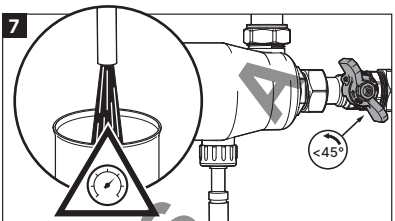

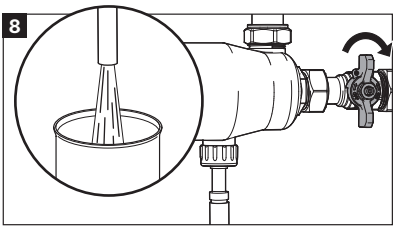

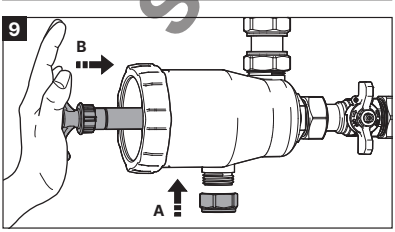

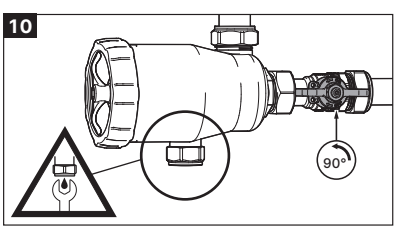

SAMPLE

10 year guarantee / Garantie 10 ans / Garanzia 10 anni / 10 Jahre Garantie / 10 jaar garantie / 10 års garanti / 10 godina jamstva / Záruka 10 let / 10-letnia gwarancja / Garantie pe 10 ani / 10 év garancia / 10-ročná záruka / Garantía 10 años / Εγγυηση 10 ετων / 10 yil garanti

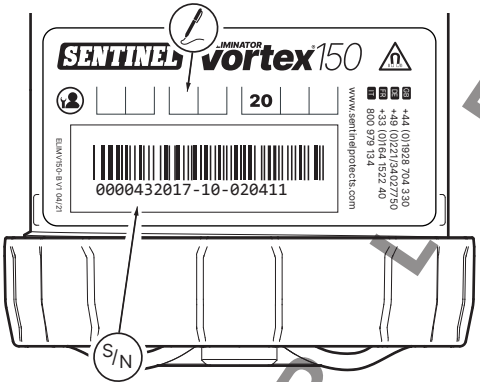

UK	www.sentinelprotects.com/uk/guarantee-registration
FR	www.sentinelprotects.com/fr/activation-de-garantie
IT	www.sentinelprotects.com/it/registrazione-garanzia
DE	www.sentinelprotects.com/de/gewaehrleistung-registrierung
NL	www.sentinelprotects.com/nl/produktregisteret
CZ	www.sentinelprotects.com/cz/registrace-produktu
PL	www.sentinelprotects.com/pl/rejestr-produkt
HU	www.sentinelprotects.com/hu/garantaltan-regisztracio
ES	www.sentinelprotects.com/es/registro-de-garantia
TR	www.sentinelprotects.com/tr/urun-kaydi
US	www.sentinelprotects.com/us/guarantee-registration
GR	www.sentinelprotects.com/uk/guarantee-registration
RO, SK, SI	www.sentinelprotects.com/uk/guarantee-registration
HR, AT, PT	www.sentinelprotects.com/uk/guarantee-registration
NO, SE, CN	www.sentinelprotects.com/uk/guarantee-registration

SAMPLE

20

S/N